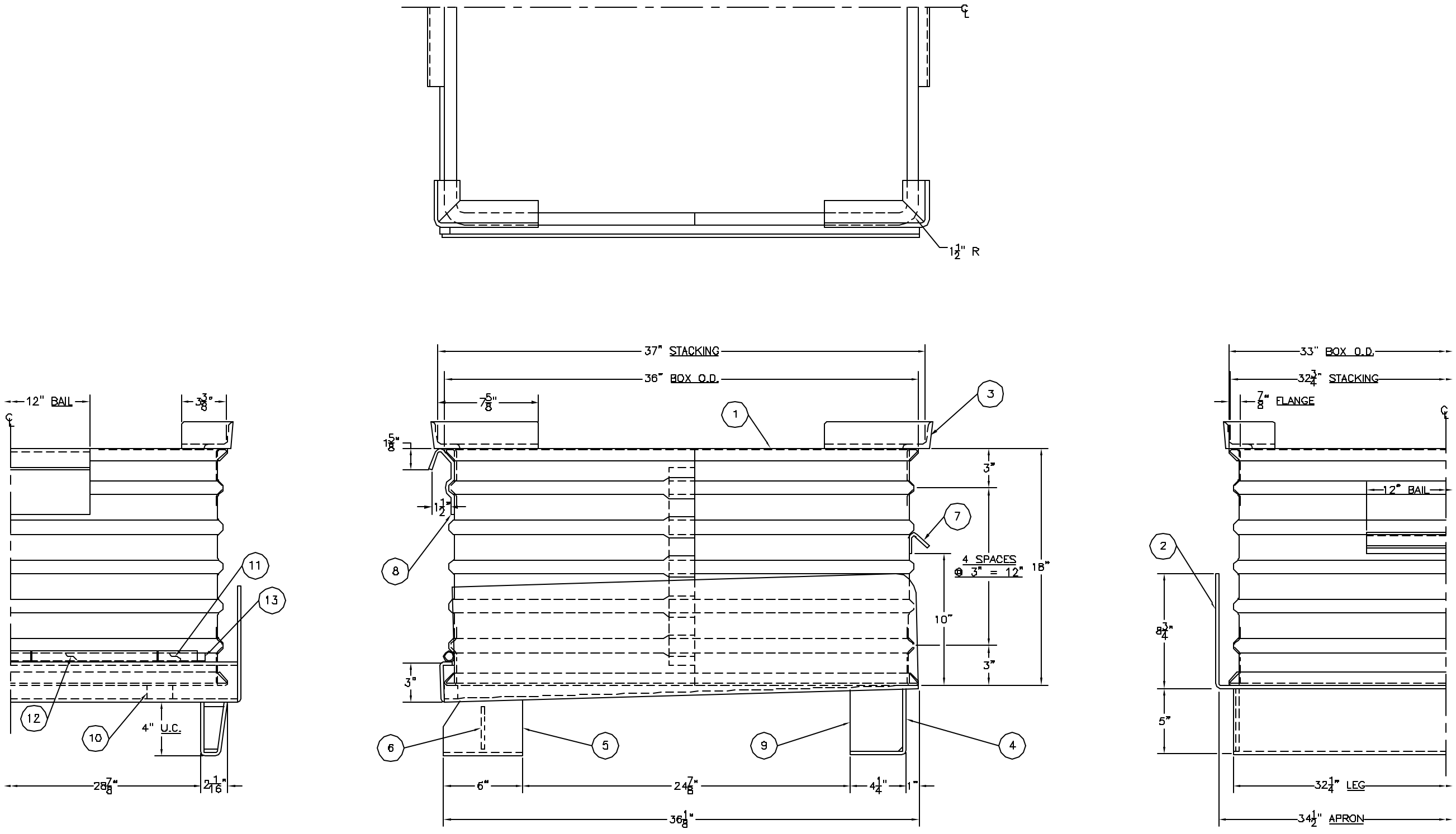

NOTE:
UNIT SECURELY WELDED
PAINT

ITEM	QTY.	DESCRIPTION	ITEM	QTY.	DESCRIPTION	ITEM	QTY.	DESCRIPTION
5	1R1L	REAR LEG 1/4 PLT.	10	2	BLOCK 1 SQ.			
4	1	FRONT LEG 1/4 PLT.	9	2	FRONTLEG GUSSET 1/4 PLT.			
3	2R2L	TIERING ANGLE 2 X 2 X 5/16 ANGLE	8	1	REAR BAIL 1/4 PLT.	13	1	HINGE PIN 9/16 ROUND
2	1	APRON 7 GA.	7	1	FRONT BAIL 1/4 PLT.	12	2	HINGE PIPE 1/2 STD.
1	2	BOX SIDE 12 GA.	6	2	REAR LEG GUSSET 1/4 PLT.	11	3	HINGE PIPE 1/2 STD

PSI
POWELL SYSTEMS, INC.

Powell Systems, Inc. FOWLER, INDIANA

CUSTOMER

SUBJECT: STANDARD D-1S CONTAINER

SIZE	SCALE	JOB NO.	DRAWING NO.
D	1/4" = 1"		E-1775
RE-DRAWN MSS	DATE 5/26/00	APPROVED	